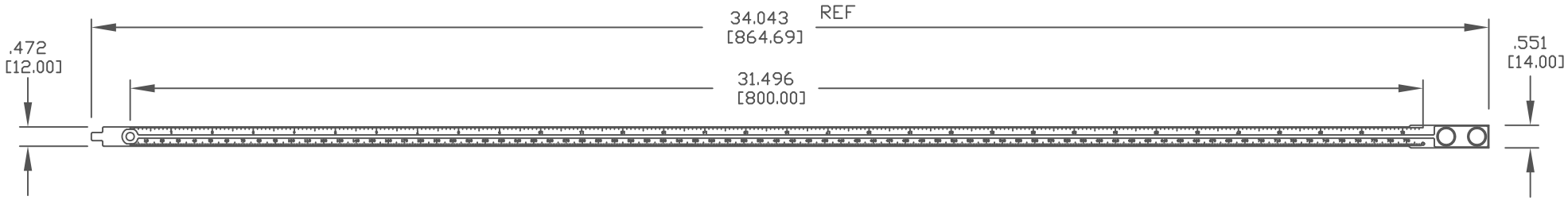

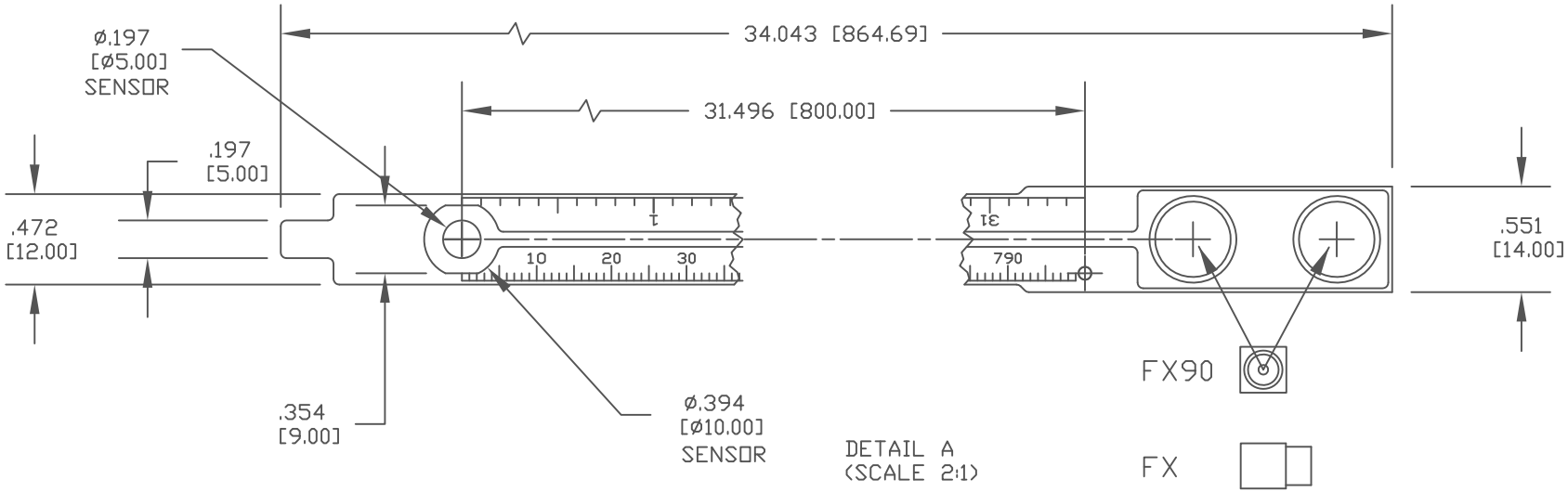

CONNECTOR OPTIONS

DIMENSIONS ARE NOMINAL INCH [MM]

NOTE:
1. WAND THICKNESS .016 [.40] OVER USABLE LENGTH 800MM.

Capacitec
87 Fitchburg Rd. Ayer, MA 01432 U.S.A.

SCALE: 1/4:1	APPROVED:	DATE: 4-3-14	
DRAWN: WMO	PROJECT NAME:		
DWG SIZE A	DRAWING TITLE: GPD-5F-A-800-XX WAND		
SERIES NO:		DRAWING NO: 5509-8542-SD	